Design

Layout

Power

VAR A: Production
VAR B: Prototype

Top.SchDoc

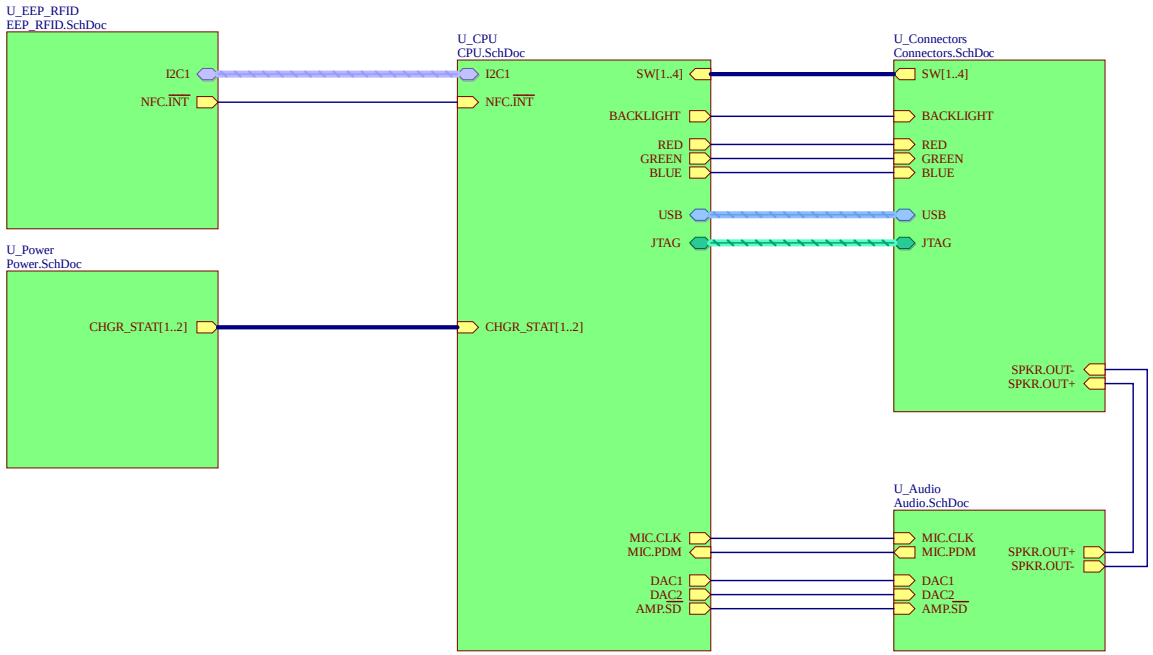

Fid1 Fid2 Fid3

* Modifications reserved *

dekimo

Rijschoolstraat 11
3000 Leuven
Belgium

PCB Name	WOTS_PARROT	PCB Number	
Project Name	WOTS_PARROT	PCB Variant	VAR_A
Customer	FHI	Designer	JQU / JJO / WVG
Date 04/11/2021	Size A3	Sheet 1 of 6	

CPU.SchDoc

MCU - GPIO

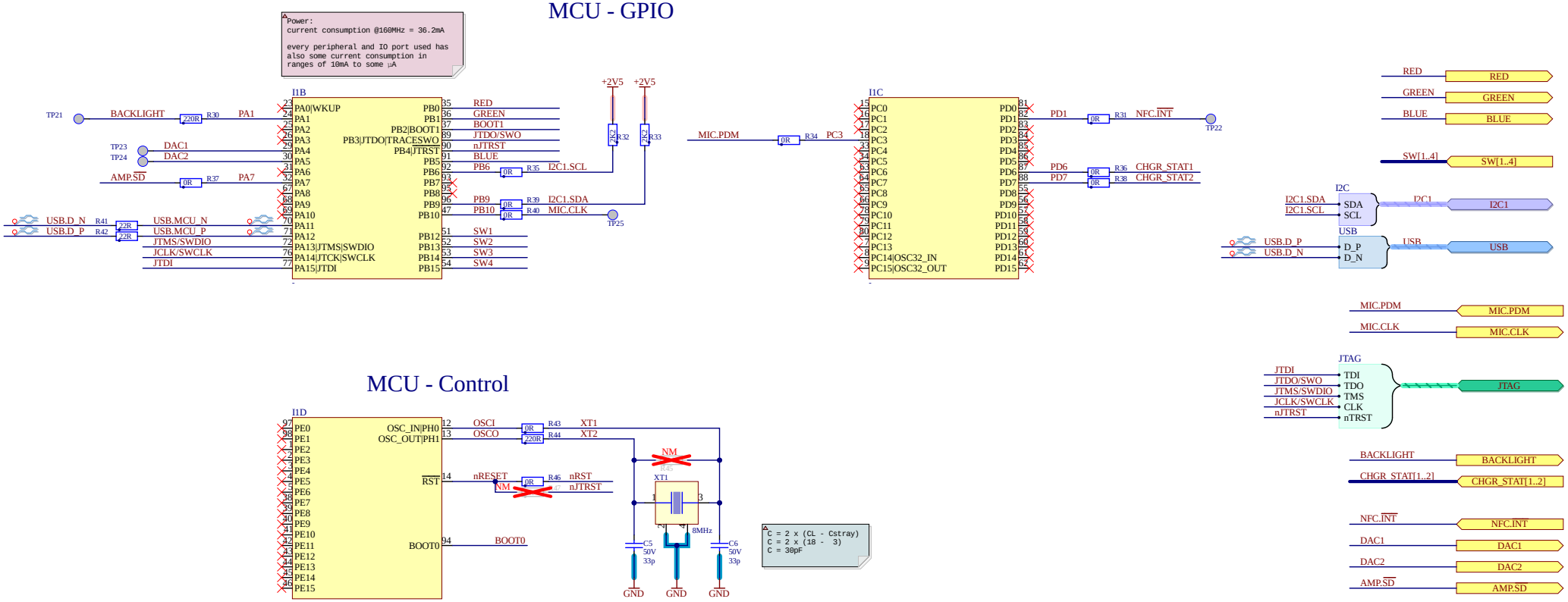

dekimo

Rijschoolstraat 11
3000 Leuven
Belgium

PCB Name	WOTS_PARROT	PCB Number	
Project Name	WOTS_PARROT	PCB Variant	VAR_A
Customer	FHI	Designer	JQU / JJO / WVG
Date	04/11/2021	Size A3	Sheet 2 of 6

* Modifications reserved *

EEP_RFID.SchDoc

NFC/RFID

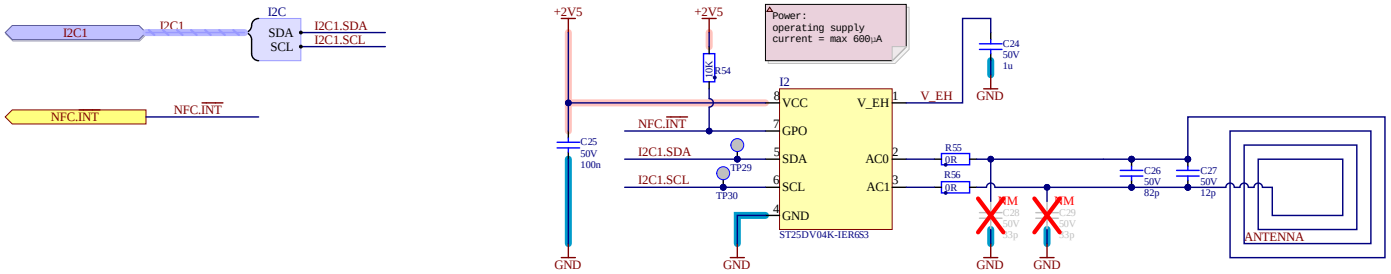

dekimo	Rijschoolstraat 11 3000 Leuven Belgium		
PCB Name	WOTS_PARROT	PCB Number	
Project Name	WOTS_PARROT	PCB Variant	VAR_A
Customer	FHI	Designer	JQU / JJO / WVG
Date 04/11/2021	Size A3	Sheet	3 of 6

* Modifications reserved *

AUDIO DAC

D-Class amplifier

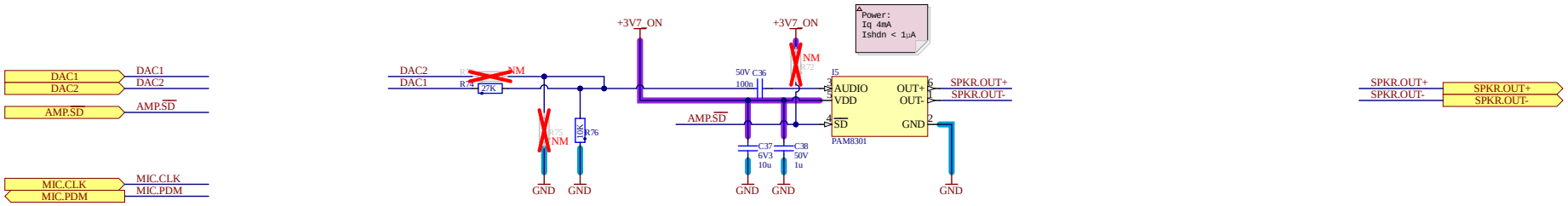

MEMS Microphone

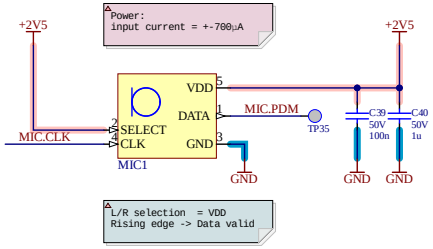

* Modifications reserved *

dekimo	Rijschoolstraat 11 3000 Leuven Belgium		
PCB Name	WOTS_PARROT	PCB Number	
Project Name	WOTS_PARROT	PCB Variant	VAR_A
Customer	FHI	Designer	JQU / JJO / WVG
Date	04/11/2021	Size A3	Sheet 4 of 6

Power.SchDoc

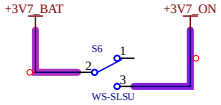

Buck

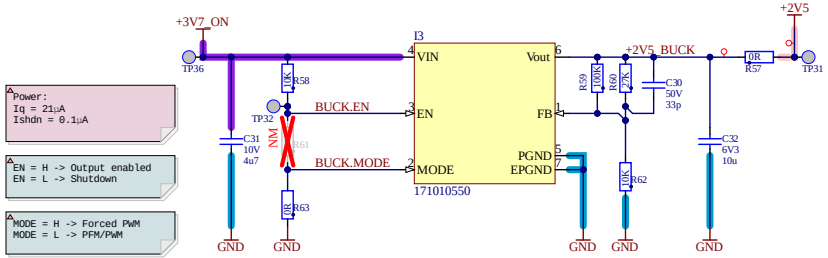


```
Power:
Iq = 21µA
Ishdn = 0.1µA
```

```
EN = H -> Output enabled
EN = L -> Shutdown
```

```
MODE = H -> Forced PWM
MODE = L -> PFM/PWM
```

```
Voltage divider for adjustable Buck on
feedback pin
FB = 0.8V
Vin = 3.7V
Vout = 2.5V

R1+R2 > 100kΩ

Vout = 0.8 * ((R1/R2)+1)
R1=2.125*R2

E24 Values
R1 = 27kΩ // 100kΩ = 21.25984kΩ
R2 = 10kΩ

calculate back:
Vout =  0.8 * ((R1/R2)+1) = 2.5007V
```

```
22pF is a recommended value,
seems like a good trade off
between overshoot and settling
time
```

Battery Charger

```
STAT[1..2]
00 : Power-Down, charging is suspended or interrupted
01 : Pre-qualification mode, CC and CV charging, Top-off mode
10 : Charge is completed
11 : Bad battery (Safety timer expired), or LDO mode
```

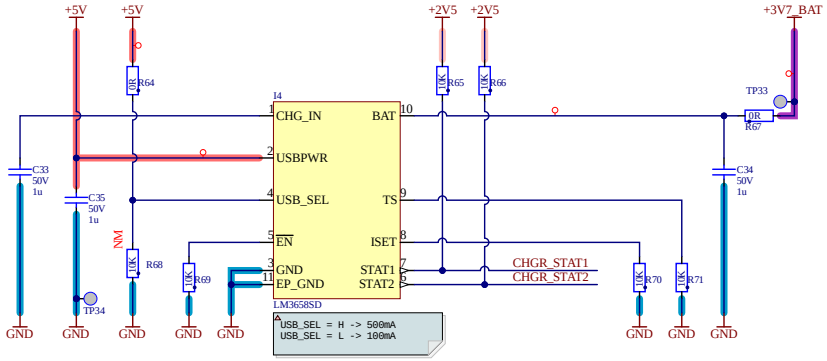


```
USB_SEL = H -> 500mA
USB_SEL = L -> 100mA
```

```
Riset = 10kΩ -> Ichg = 220mA  270mA
Riset =  5kΩ -> Ichg = 465mA  535mA
```

CHGR_STAT[1..2] → CHGR_STAT[1..2]

dekimo
Rijschoolstraat 11
3000 Leuven
Belgium

PCB Name	WOTS_PARROT	PCB Number	
Project Name	WOTS_PARROT	PCB Variant	VAR_A
Customer	FHI	Designer	JQU / JJO / WVG
Date	04/11/2021	Size A3	Sheet 5 of 6

* Modifications reserved *

Connectors

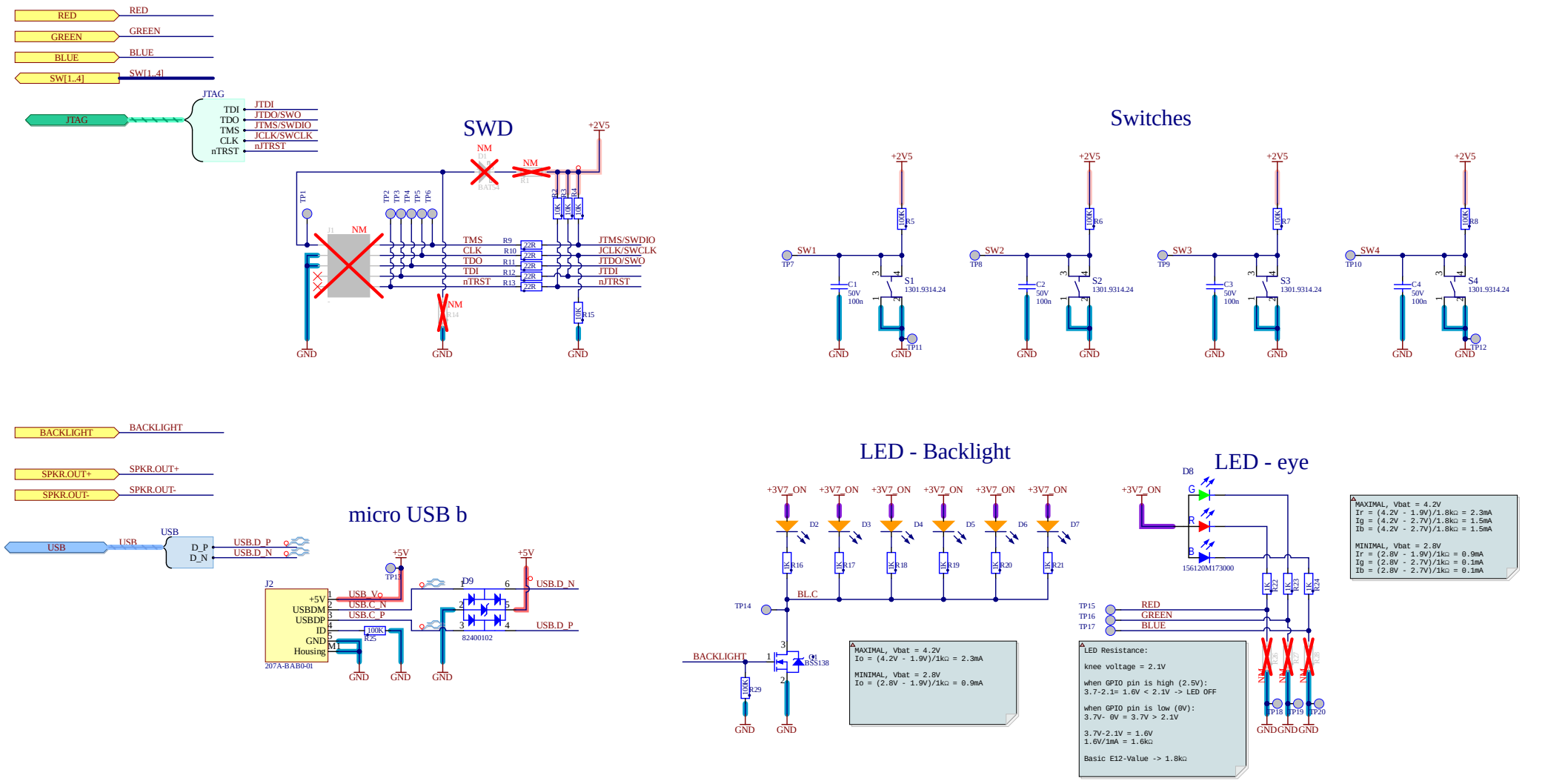

* Modifications reserved *

dekimo	Rijschoolstraat 11 3000 Leuven Belgium		
PCB Name	WOTS_PARROT	PCB Number	
Project Name	WOTS_PARROT	PCB Variant	VAR_A
Customer	FHI	Designer	JQU / JJO / WVG
Date	04/11/2021	Size A3	Sheet 6 of 6